iJRASET
International Journal For Research in Applied Science and Engineering Technology

INTERNATIONAL JOURNAL FOR RESEARCH

IN APPLIED SCIENCE & ENGINEERING TECHNOLOGY

Volume: 8 **Issue:** VIII **Month of publication:** August 2020

DOI: https://doi.org/10.22214/ijraset.2020.31113

www.ijraset.com

Call: 08813907089 | E-mail ID: ijraset@gmail.com

International Journal for Research in Applied Science & Engineering Technology (IJRASET)
ISSN: 2321-9653; IC Value: 45.98; SJ Impact Factor: 7.429
Volume 8 Issue VIII Aug 2020- Available at www.ijraset.com

Advanced Exhaust System with Efficacious Air and Noise Pollution Minimization

Jaimil R. Thakkar[1], Jay B. Soni[2], Kashyap A. Thakkar[3], Prof. Sankalp Kulkarni[4]
[1, 2, 3]Undergraduate students [4]Professor, Dept. of Mechanical Engineering, G.H. Patel College of Engineering& Technology, Vallabh Vidyanagar-388120 (Gujarat), India

Abstract: The advanced exhaust system having improved air as well as noise pollution reduction is a better alternative to the conventional system. By encompassing the combined effect of activated charcoal and lime water, this system reaches excellence in absorbing the amount of pollutant contents like nitrogen oxides(NOx), Sulphur oxides(SOx), unburnt hydrocarbons (UBHC), carbon dioxide(Cox) from exhaust gas and reducing the noise level of the same by the combined use of concentrated activated charcoal layer and lime water solution. The new simplified yet much effective design of the system performs a crucial role in improving the filtration process, maintaining sustained flow of exhaust gas, uniform temperature distribution and minimal deformation.

Keywords: Advanced, Lime water, activated charcoal, perforated tube, exhaust gas, NOx (nitrogen oxides), SOx (Sulphur oxides), COx (carbon oxides), UBHC (unburnt hydro carbons), noise, pollution, efficacious,

I. INTRODUCTION

Air and noise pollution are the 2 major problems having a greater negative impact to the environment than the rest. Automobile sectors are the major source of it as the exhaust gases coming out of the vehicles does create both the pollution. The exhaust gas contains the major harmful Sulphur oxides, nitrogen oxides, carbon oxides and unburnt hydrocarbons responsible causing the air pollution. Also the sound coming from the exhaust creates noise pollution. Due to the new BS-VI norms imparted by the Indian government which implies heavy restrictions on the emission control there is a necessity for the automobile industries to focus on pollution control by improving the exhaust emission system. Our modified system has been designed and developed to follow the same with a ray of hope for better pollution control.

II. COMPONENTS&ADDITIVES

Barrel nipple | NRV | Inlet pipe | Outer shell

Perforated tube | Outlet Pipe | Filler valve bush | Drain valve

Fig.1 components of the system

A. Additives

Calcium Hydroxide (Ca(OH)2) – Lime water Activated Charcoal

©IJRASET: All Rights are Reserved

B. Dimensional Description

Inlet pipe diameter : 30 mm
Inlet pipe length : 170 mm
Outer shell diameter : 110 mm
Outer shell length : 345 mm
Outlet pipe diameter : 25 mm
Outlet pipe length : 145 mm Perforated tube length : 100 mm Perforated tube diameter : 30 mm Perforated tube hole diameter : 2,2.5,3 mm Non return valve diameter : 30 mm Barrel nipple diameter : 25 mm
Barrel nipple length : 70 mm
Bend pipe length : 400 mm
Bend pipe diameter : 25 mm Filler valve hole diameter : 25 mm Drain valve hole diameter : 12.5 mm

C. Material used

Mild Steel used due to its beneficial properties like: High impact strength, high tensile strength, good ductility, low cost, good performance under high temperature conditions

III. CONSTRUCTION

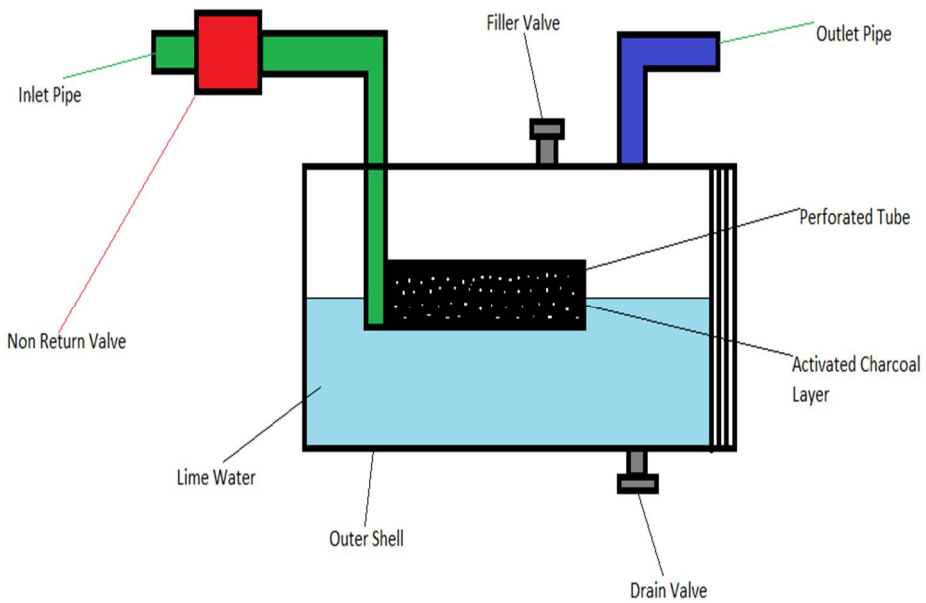

Fig2.2D Diagram of system

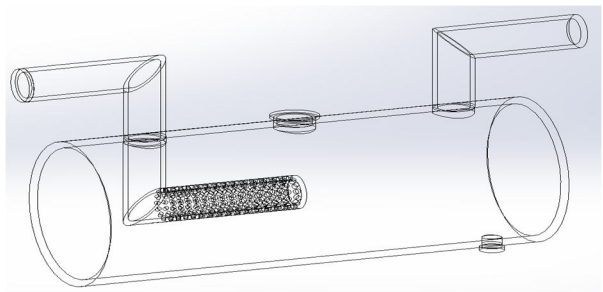

Fig3.Isometric view

©IJRASET: All Rights are Reserved

Fig4.Actual Model

The silencer consist of an outer shell of which one end is connected to the engine exhaust and the other end provides the outlet for the exhaust gas. There is a non-return valve before the inlet pipe which does not allow the back flow of the exhaust gas. In the outer shell, the inlet pipe coming from the engine exhaust is connected to a perforated tube. The perforated tube is precisely designed in which the tube is drilled with holes of 1 mm,2 mm and 3 mm diameter holes. On the perforated tube, a moderately thick concentrated solution layer of activated charcoal is applied. There is a filler valve to pour the lime water in the shell. The shell is half filled with the lime water. A drain valve is provided to collect the tar removed from the exhaust gas during filtration process. At last there is outlet pipe through which the exhaust gas is removed from the silencer.

IV. WORKING

Exhaust gas coming out from the engine passes through non return valve and enter in the outer shell.
Perforated tube has different diameter holes on it due to which large mass bubbles of gas gets converted into small mass bubbles. Then it passes through activated charcoal layer.
This activated charcoal has highly porous structure and it also posses extra free valence due to which it has high absorption capacity. Hence it absorbs the unburn hydrocarbon contents from exhaust gas and completes the first stage of filtration.
Then the gas enters in the Lime water and gets dissolved in it. Here multiple chemical reactions take place due to which the pollutant particles get extracted in the form tar and gathered at the bottom of the shell.
The chemical reactions are as followed:

1) $NO_2 + 2H_2O$ -----> $2HNO_2 + 2HNO_3$
a) $Ca(OH)_2 + 2HNO_2$ ---> $Ca(NO_2)_2 + 2H_2O$
b) $Ca(OH)_2 + 2HNO_3$----------> $Ca(NO_3)_2 + 2H_2O$
2) $Ca(OH)_2 + CO_2$ ------ > $CaCO_3 + H_2O$
a) $CaCO_3 + H_2O$ ----------> $CO_2 + Ca(HCO_3)_2$
3) $Ca(OH)_2 + CO$------> $CaCO_3 + H_2O$
4) $Ca(OH)_2 + SO_2$----> $CaSO_3 + H_2O$

By these reactions the pollutant contents like SOx, NOx, COx gets precipitated and collected I the form of tar from the bottom of shell which can be removed through the drain valve.
At last the filtered gas is removed out through the outlet pipe. Here as the gas has been passed through the lime water the noise level gets reduced to much lower level.
In this way the modified silencer reduces the air pollution as well as noise pollution. Here along with charcoal paste, the aqueous lime water solution acts as the deterrent to the pollution problem and hence this system can also be termed as aqua silencer system

V. RESULTS

A. PUC Test

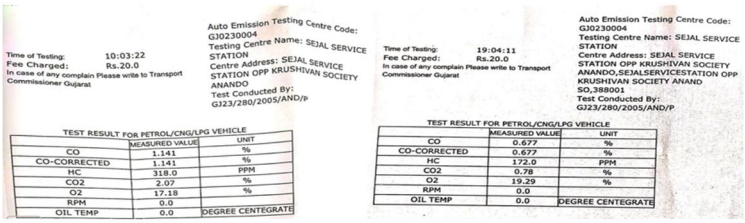

Time of Testing: 10:03:22
Fee Charged: Rs.20.0
In case of any complain Please write to Transport Commissioner Gujarat

Auto Emission Testing Centre Code: GJ0230004
Testing Centre Name: SEJAL SERVICE STATION
Centre Address: SEJAL SERVICE STATION OPP KRUSHIVAN SOCIETY ANANDO
Test Conducted By: GJ23/280/2005/AND/P

TEST RESULT FOR PETROL/CNG/LPG VEHICLE

	MEASURED VALUE	UNIT
CO	1.141	%
CO-CORRECTED	1.141	%
HC	318.0	PPM
CO2	2.07	%
O2	17.18	%
RPM	0.0	
OIL TEMP	0.0	DEGREE CENTEGRATE

Time of Testing: 19:04:11
Fee Charged: Rs.20.0
In case of any complain Please write to Transport Commissioner Gujarat

Auto Emission Testing Centre Code: GJ0230004
Testing Centre Name: SEJAL SERVICE STATION
Centre Address: SEJAL SERVICE STATION OPP KRUSHIVAN SOCIETY ANANDO,SEJALSERVICESTATION OPP KRUSHIVAN SOCIETY ANAND SO,388001
Test Conducted By: GJ23/280/2005/AND/P

TEST RESULT FOR PETROL/CNG/LPG VEHICLE

	MEASURED VALUE	UNIT
CO	0.677	%
CO-CORRECTED	0.677	%
HC	172.0	PPM
CO2	0.78	%
O2	19.29	%
RPM	0.0	
OIL TEMP	0.0	DEGREE CENTEGRATE

Fig5. PUC test results of conventional silencer(left) and modified silencer(right)

©IJRASET: All Rights are Reserved

TABLE I
PUC Test Results Comparison

	Conventional silencer	Modified Aqua silencer	difference
CO	1.141%	0.677%	40.66% reduced
HC	318 ppm	172 ppm	45.91% reduced
CO2	2.07%	0.78%	62.31% reduced
O2	17.18%	19.29%	12.28% increased

B. Noise level Test

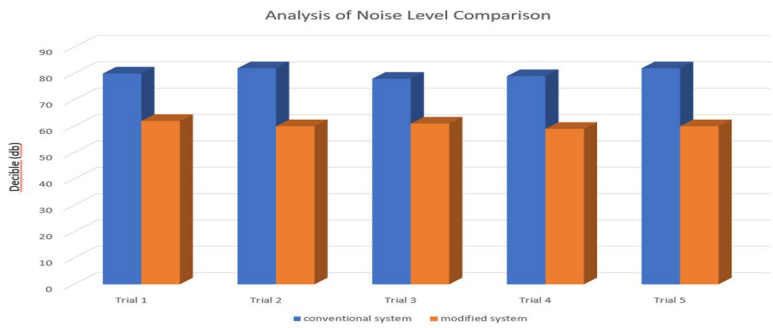

Fig6. Noise level test results

Table 2
Noise Level Test Results Comparison

	Conventional silencer(db)	Modified silencer(db)
Trial 1	80	62
Trial 2	82	60
Trial 3	78	61
Trial 4	79	59
Trial 5	82	60

Aqua silencer primarily aimed at curbing air pollution; also eases the noise that comes out from exhaust system. The exhaust gases which were earlier directly made to leave the system, now finds its way out while being in contact with the aqueous solution. This actually dampens the noise coming from the exhaust and helps reducing noise pollution

C. Thermal & Deformation Analysis

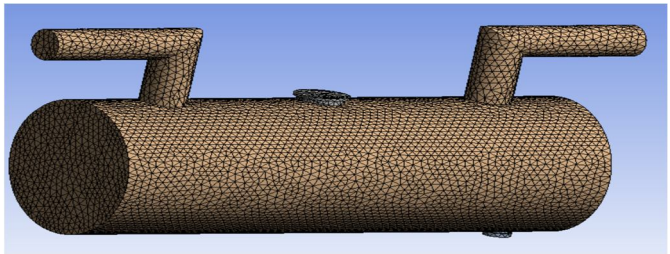

Fig7.3D meshing

©IJRASET: All Rights are Reserved

Mesh type: 3D tetrahedron elements Algorithm : Patch independent Element size : 5 mm
Behavior : Soft
Refinement : proximity & curvature Feature angle : 30 degree
Nodes: 126897
Elements : 67869

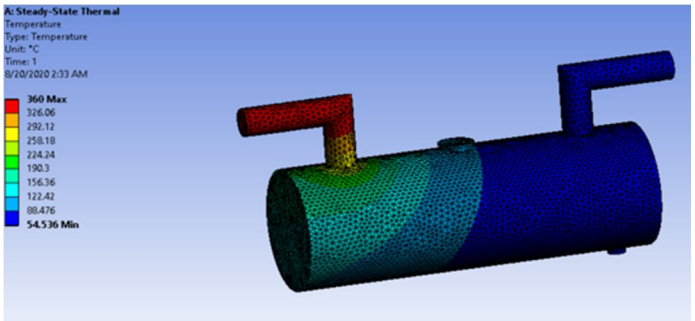

Fig8. Thermal Analysis

Temperature input of exhaust gas: 360 degree Celsius. Results show that the temperature was maximum in the inlet pipe section (326.06-360) which got reduced to around 224.24 degree at the entrance of the outer shell. Moving forward. rapid decrement in temperature takes place due to uniform heat distribution and at the outlet section, temperature as low as 54.536 degree is registered.

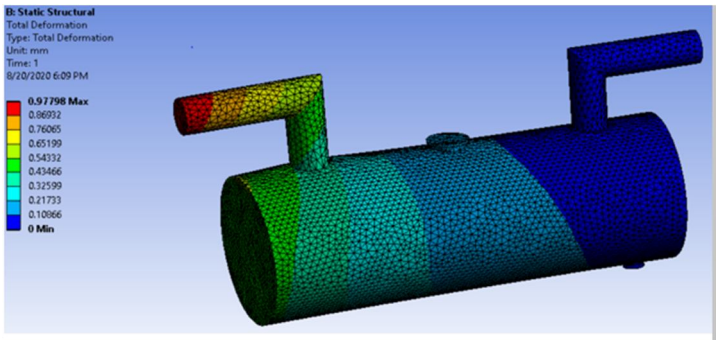

Fig9.Deformation analysis

Results show the deformation taking place in the silencer body due to the temperature input. Maximum deformation is detected at the entrance of inlet pipe which is 0.97798 mm. At the contact of inlet pipe & outer shell, deformation is registered near to 0.43466-0.54332 mm. Whereas in the later part of the shell as well as at the outlet pipe section, the deformation was only in the range of 0-0.10866 mm which is nearly negligible.

VI. CONCLUSION

With the help of experimental as well as numerical analysis, the results obtained represent the positive impact of the modified silencer system.

The PUC test results show almost 50% reduction of pollutant contents due to the implementation of modified silencer system.

The NOISE LEVEL test shows the modified system succeed in bringing down the noise level under 60 db by reducing almost 20 db compared to the conventional system.

The TEMPERATURE DISTRIBUTION analysis done in Ansys software represents the excellence done in design section to keep the body protected from the incoming exhaust gas temperature and maintain the body temperature as low as possible.

The DEFORMATION analysis done in Ansys software showcases the deformation of the system body due to the incoming hot exhaust gases. The negligible deformation results encompass the uniformity and strength level of the body under high stress condition which directly leads to longer life of the system.

To conclude, there is no doubt about the capability of this system. It has managed the load it received well and the results obtained are evidence of it. The system is highly promising and is deemed to be a better alternative to the conventional exhaust system.

©IJRASET: All Rights are Reserved

VII. ACKNOWLEDGMENT

We sincerely express our deep sense of gratitude to professor Sankalp Kulkarni, (Professor), Department of Mechanical Engineering, G.H. Patel College of Engineering and Technology for his extraordinary support and guidance throughout the project. We would also like to thank Mr. Manubhai Patel of HN Engineering Industry who continuously shared his valuable experience and technical knowledge. Without him this project wouldn't have been a reality.

REFERENCES

[1] Abhiram Saraf, Tejas Khese, Tarang Shah, Gaurav Gaikwad, S.D. Bhaisare, Design and Analysis of Aqua Silencer, Feb -2017, International Research Journal of Engineering and Technology IRJET,vol 4,issue 2.

[2] Alen.M.A , Akshay.M, PremSankar.R , Mohammed Shafeeque.M, Fabrication and Testing Of Aqua Silencer, Aug-2015, International Research Journal of Engineering and Technology (IRJET),vol 2 , issue 5

[3] Manoj Anil Ghawate , Dhiraj Rajan Deshmane.aqua silencer to control polluted exhaust emission & noise in vehicles,International Research Journal of Modernization in Engineering Technology and Science(IRJMETS),volume 2 ,issue 7

[4] B.Jothi Thirumal, Noise Control System by using Aqua Silencer, December, 2015, International Journal of Mechanical Engineering Research,vol 14 issue 14

[5] Keval I. Patel, Ravi Engineer, Parikshit K. Patel, Cfd Analysis of Perforated Tube of Aqua Silencer, May 2015, PARIPEX - INDIAN JOURNAL OF RESEARCH,vol4 ,issue 5

[6] Harshit Saraswat, Aqua silencer,October 2017, Research Journal of Recent Sciences,vol 6 ,issue 10

[7] Dharmeshkumar Parmar , Pratik Dabhi , Pranav Soni , Firoj H. Pathan, Reduction of Air and Noise Pollution by Aqua Silencer- A Review, February-2017, International Journal of Advance Research in Engineering, Science & Technology,vol4 issue 4

©IJRASET: All Rights are Reserved

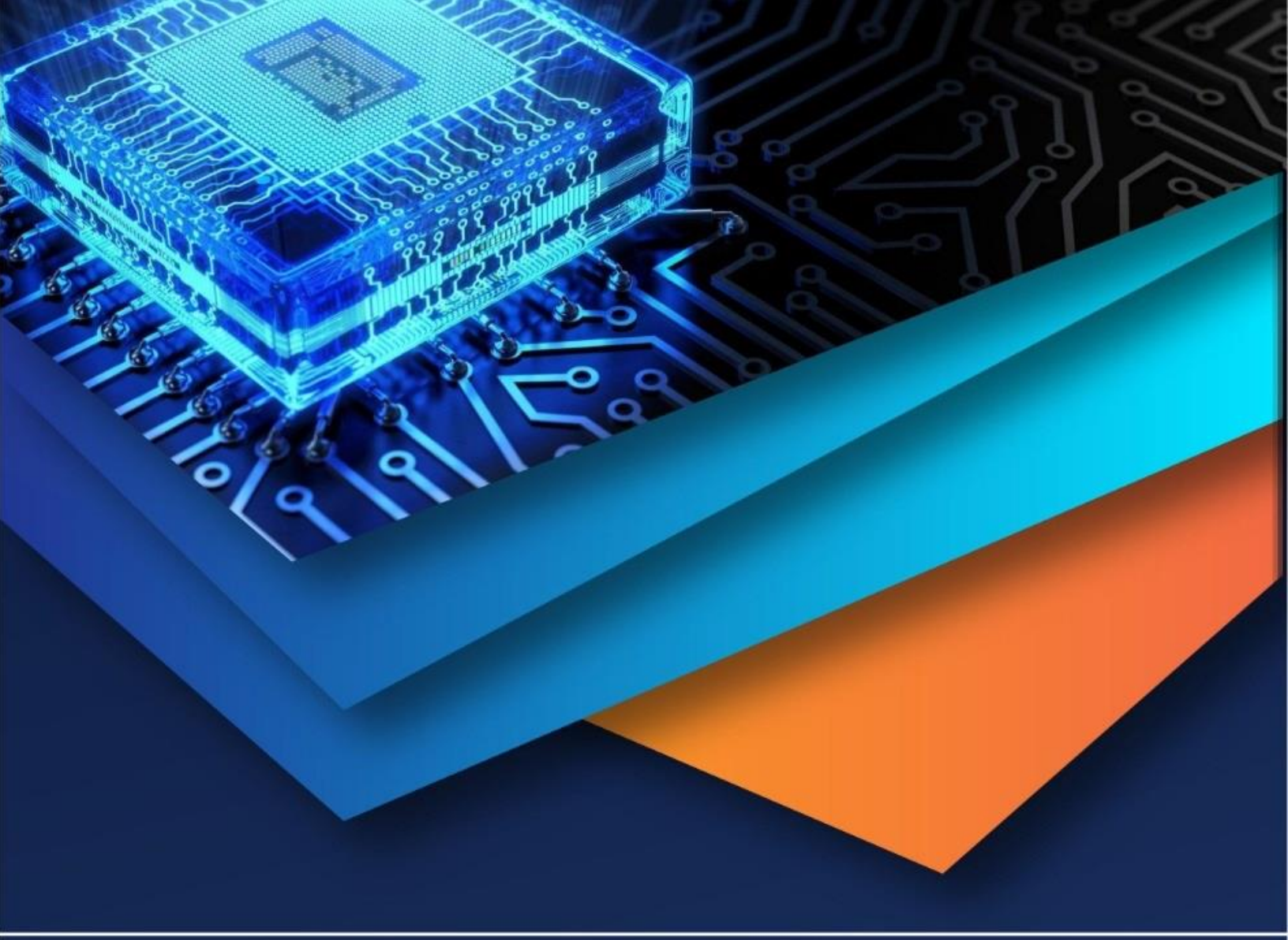

10.22214/IJRASET

45.98

IMPACT FACTOR: 7.129

IMPACT FACTOR: 7.429

INTERNATIONAL JOURNAL FOR RESEARCH

IN APPLIED SCIENCE & ENGINEERING TECHNOLOGY

Call : 08813907089 (24*7 Support on Whatsapp)